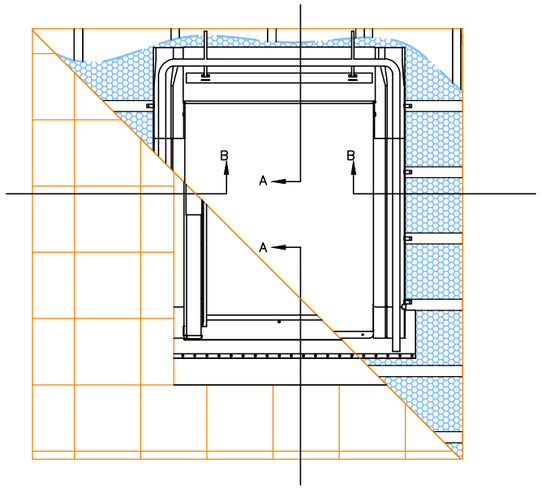

INDICATIVE SECTIONAL VIEW

Detail B
1:5

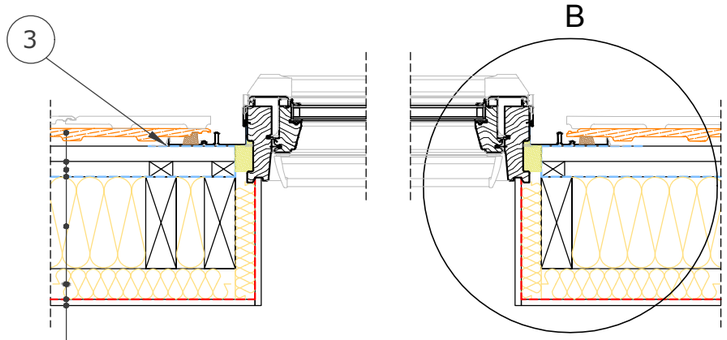

Section B-B'
1:10

Ceramic Tile
Batten and Counter Batten
Ventilation Path
Breather Membrane
Insulation - Mineral Wool
Insulation - Mineral Wool
Vapour Barrier
Internal Finish

3. Side Flashing Holding Piece

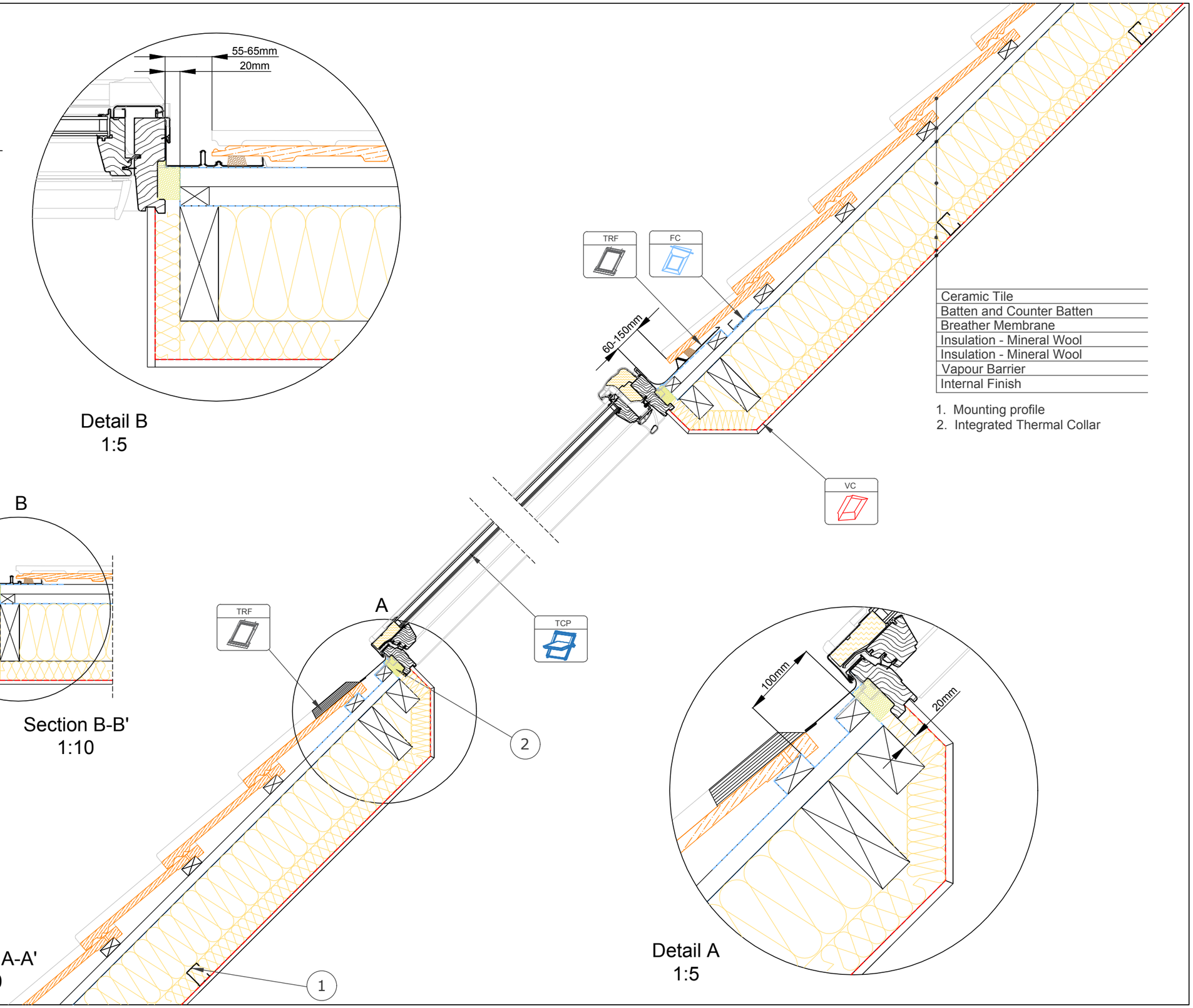

Ceramic Tile
Batten and Counter Batten
Breather Membrane
Insulation - Mineral Wool
Insulation - Mineral Wool
Vapour Barrier
Internal Finish

1. Mounting profile
2. Integrated Thermal Collar

Section A-A'
1:10

Detail A
1:5

keylite

www.keyliteroofwindows.com
E-Mail: info@keylite.co.uk
Tel: 028 8675 8921 Fax: 028 8675 8923
Keylite Roof Windows Ltd. Derryloran Industrial Estate, Cookstown, County Tyrone, Northern Ireland BT80 9LU.

This drawing is for informational-demonstrative purposes only and as such cannot constitute a basis for performance.
All dimensions presented in this drawing should be verified on site.
Roof constructions needs to be right with current building regulations.
Keylite is not responsible for or the installation quality on the roof.
Documentation only for personal use. Copying and sharing without permission is prohibited.

Roofing Style	Window	Flashing	Felt Collar	Vapour Collar	Angle	DWG No.	Scale	Format
max 45mm	TCP	TRF	FC	VC	20°- 90°	TCP-TRF Rev. D 2022	1:5 1:10 1:20	A3